THIS DRAWING IS UNPUBLISHED. RELEASED FOR PUBLICATION 2007
© COPYRIGHT 2007 . ALL RIGHTS RESERVED.

REVISIONS					
P	LTR	DESCRIPTION	DATE	DWN	APVD
	A15	Design 2 added.	21DEC2011	Kirs.	Schus
	A16	Designs adapted. Crimp height to PN 962863 added. Drawing corrected.	01OCT2012	Kirs.	Merz
	A17	ECR-15-012070	13AUG2015	JBJH	BK
	A18	Added PN 5-963860-1, 5-963860-2 and 5-965982-1, new design 7 and 8	19NOV2020	FRAN	MERZ

STRIP FORM
Bandware

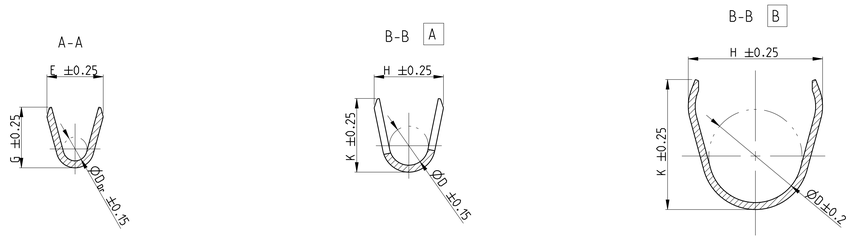

1. CONTACT AREA PRE SILVER MIN. 3µm
CANTILEVER SPRING PLAIN
Kontaktzone vorversilbert min. 3µm
Ueberfeder blank

2. CONTACT BODY Ni-PLATING MIN. 0.5µm; CONTACT AREA PRE-GOLD MIN. 0.6µm
OVER NICKEL; CRIMP AREA PRE-TIN
CANTILEVER SPRING PLAIN
Kontaktkoerper vernickelt min. 0.5µm; Kontaktzone vorvergoldet min. 0.6µm ueber Nickel
Crimpzone vorverzinnt; Ueberfeder blank

3. IN THIS AREA CRACK SHAPING AT THE SURFACE PERMISSIBLE
In diesem Bereich Rissbildung in der Oberflaeche zulaessig

4. PRE-TIN MIN. 1µm; CANTILEVER SPRING PLAIN
vorverzinnt min. 1µm; Ueberfeder blank

5. AWG 12 TXL 828905-1 OR / oder 282536-1
AWG 12 GXL 638865-1

6. ATTENTION! CONSTRUCTION OF THE CONTACT CAVITY IN THE AREA OF THE SINGLE WIRE SEAL IS Ø6.4$^{+0.1}_{-0.05}$
Achtung! Die Kammer ist im Bereich der Einzeldichtung auf Ø6.4$^{+0.1}_{-0.05}$ auszulegen

7. PUNCHED WITH VOLATILIZING STAMPING-OIL
Gestanzt mit verfluechtigendem Stanzoel

FLR-/FLK-WIRE
FLR-/FLK-Leitung

DESIGN 1
Ausfuehrung 1

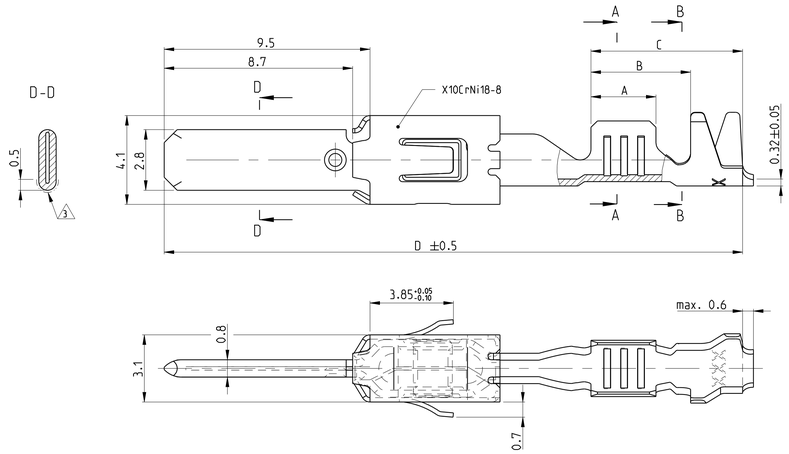

DESIGN 2
Ausfuehrung 2

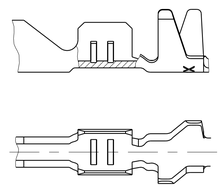

DESIGN 3
Ausfuehrung 3

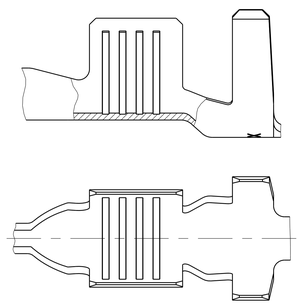

A18 DESIGN 7
Ausfuehrung 7

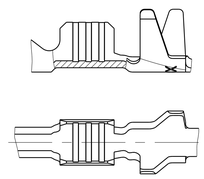

SINGLE WIRE SEAL
Einzeldichtungssystem

DESIGN 4
Ausfuehrung 4

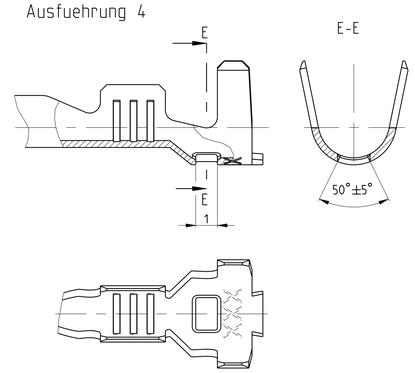

DESIGN 5
Ausfuehrung 5

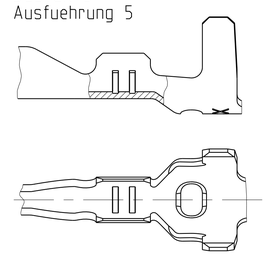

DESIGN 6
Ausfuehrung 6

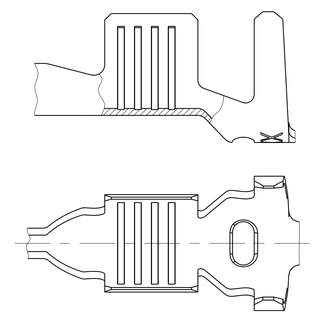

DESIGN 8
Ausfuehrung 8 A18

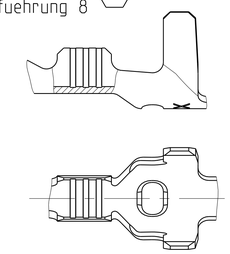

	STRIPFORM	REV	DESIGN	MATERIAL	SURFACE	DGB	INSULATIONØ	STRIP FORM WIRE CRIMP	STRIP FORM INSUL. CRIMP	APPLICATION TOOL	HAND TOOL	A	B	C	D	TE ORDER-NO. SINGLE WIRE SEAL	TE ORDER-NO.
	Bandware		Ausfuehrung	Werkstoff	Oberflaeche	mm²	Isolationsø mm	Drahtcrimp	Isolationscrimp	Anschlagwerkzeug	Handzange					Einzeldichtungssystem (CAVITY DIAMETER) (Kammerdurchmesser)	SEALING PLUG Blindstopfen
								Bandware									
								CRIMP DIMENSION mm Crimpabmessungen mm		EXTRACTION TOOL Ausdrueckwerkzeug No. 968107-1							
SINGLE WIRE SEAL / Einzeldichtungssystem	1-1719504-2	A	4	CuSn4	1	12 AWG	max. 3.0	E = 4.0 G = 4.2 D_{Dr} = 2.0	A H = 5.3 K = 5.0 D = 3.6	1852291-3	-	3.5	6.0	7.6	26.8	5	828922-1
	1-1719504-1	A	4		4												
	3-968947-1	A	6	CuSn0.20	4	>2.5 - 4.0 FLR	max. 3.7	E = 4.5 G = 4.7 D_{Dr} = 2.3	B H = 6.2 K = 6.0 D = 4.3	MQC APPLICATOR 2-541537-2	539635-1 MATRIZE : 539727-2	4.3	6.9	8.5	28.5	828985 (Ø6.4) 6	828986-1
	2-968947-2	A	6	CuFe	1												
	2-968947-1	A	6		4												
	1-968947-2	A	6	CuSn4	1												
	1-968947-1	A	6		4												
	2-962916-3	E	4	CuFe	2	>1.0 - 2.5 FLR	max. 3.0	E = 3.6 G = 3.8 D_{Dr} = 1.7	A H = 5.3 K = 5.0 D = 3.6	MQC APPLICATOR 2-878560-2	734440-1	3.5	6.0	7.6	26.8	828905 (Ø5.0)	828922-1
	2-962916-2	E	4		1												
	2-962916-1	E	4		4												
	1-962916-3	E	4	CuSn4	2												
	1-962916-2	E	4		1												
	1-962916-1	E	4		4												
	2-962915-3	E	4	CuFe	2	0.5 - 1.0 FLR	max. 2.1	E = 2.6 G = 2.9 D_{Dr} = 1.2	A H = 5.0 K = 4.8 D = 3.3	MQC APPLICATOR 2-878559-2	734438-1	3.0	5.4	7.0	26.8	828904 (Ø5.0)	
	2-962915-2	E	4		1												
	2-962915-1	E	4		4												
	6-962915-6	E	4	CuSn4	7 2												
	1-962915-3	E	4		2												
	1-962915-2	E	4		1												
	1-962915-1	E	4		4												
	5-965982-1	A	8	CuSn4	4	0.2 - 0.5 FLR	max. 2.1	E = 2.1 G = 2.1 D_{Dr} = 0.8	A H = 4.7 K = 4.5 D = 3.2	MQC APPLICATOR 2-878558-2	539635-1 MATRIZE : 539737-2	2.5	4.9	6.5	26.8	828904 (Ø5.0)	
	1-965982-3	A	5		2												
	1-965982-1	A	5		4												
UNSEALED / ungedichtet	3-968946-1	A	3	CuSn0.20	4	>2.5 - 4.0 FLR	2.7 - 3.7	E = 4.5 G = 4.7 D_{Dr} = 2.3	A H = 5.7 K = 5.9 D = 3.3	MQC APPLICATOR 2-541534-2	539635-1 MATRIZE : 539723-2	4.3	6.6	8.5	28.5		
	2-968946-2	A	3	CuFe	1												
	2-968946-1	A	3		4												
	1-968946-2	A	3	CuSn4	1												
	1-968946-1	A	3		4												
	2-962843-3	C	1	CuFe	2	>1.0 - 2.5 FLK	2.4 - 3.7	E = 3.6 G = 3.8 D_{Dr} = 1.7	A H = 5.5 K = 5.7 D = 3.2	MQC APPLICATOR 2-878552-2	734417-3	3.6	5.2	8.9	28.6		
	2-962843-2	C	1		1												
	2-962843-1	C	1		4												
	1-962843-3	C	1	CuSn4	2												
	1-962843-2	C	1		1												
	1-962843-1	C	1		4												
	2-962842-3	E	1	CuFe	2	>1.0 - 2.5 FLR	2.1 - 2.9	E = 3.6 G = 3.8 D_{Dr} = 1.7	A H = 4.3 K = 4.5 D = 2.6	MQC APPLICATOR 2-878551-2	734417-2	3.6	5.2	8.2	27.9		
	2-962842-2	F	1		1												
	2-962842-1	E	1		4												
	1-962842-3	E	1	CuSn4	2												
	1-962842-2	E	1		1												
	1-962842-1	E	1		4												
	2-962841-3	F	1	CuFe	2	0.5 - 1.0 FLR	1.4 - 2.1	E = 2.6 G = 2.8 D_{Dr} = 1.1	A H = 3.2 K = 3.4 D = 1.8	MQC APPLICATOR 2-878550-2	734417-1	3.0	4.6	7.0	26.7		
	2-962841-2	F	1		1												
	2-962841-1	F	1		4												
	1-962841-3	F	1	CuSn4	2												
	1-962841-2	F	1		1												
	1-962841-1	F	1		4												
	2-963860-3	B	2	CuFe	2	0.2 - 0.5 FLR	1.3 - 1.6	E = 2.1 G = 2.1 D_{Dr} = 0.8	A H = 2.9 K = 2.9 D = 1.4	MQC APPLICATOR 2-878549-2	734538-1	2.5	3.7	5.8	25.5		
	2-963860-2	B	2		1												
	2-963860-1	B	2		4												
	5-963860-2	A	7	CuSn4	1												
	5-963860-1	A	7		4												
	1-963860-3	B	2		2												
	1-963860-2	B	2		1												
	1-963860-1	B	2		4												

A16 A18

4806 (3/13)

THIS DRAWING IS A CONTROLLED DOCUMENT.

DIMENSIONS: mm

TOLERANCES UNLESS OTHERWISE SPECIFIED: 0 PLC ±; 1 PLC ±; 2 PLC ±0.2; 3 PLC ±; 4 PLC ±; ANGLES ±1.5°

MATERIAL - -

FINISH - -

DWN K.Gerlach 14.JUN1999
CHK H. -
APVD -

PRODUCT SPEC 108-18063
APPLICATION SPEC 114-18051
WEIGHT -
Customer Drawing

TE Connectivity

NAME PRODUCT GROUP DRAWING FOR TAB 2.8x0.8
Produktgruppenzeichnung fuer
Flachstecker 2.8x0.8

SIZE A0 CAGE CODE 00779 DRAWING NO C-1355052 RESTRICTED TO -
SCALE 10:1 SHEET 1 OF 1 REV A18